SAPAR

Automotive Cyber Security Academy 2023

Chapter 4 – Automotive Hardware Security

Dr. Jetzabel Maritza Serna-Olvera

SAPAR

3

Secure Hardware Extension

Secure Hardware Extension

- SHE is a security concept specific to the automotive industry.
  - it is an on-chip security extension for microcontroller units (MCUs).
  - Created by OEMs Audi, BMW and Escrypt.
  - Standardize by the Software Initiative (Hersteller Initiative Software – HIS) in 2009.
- SHE Design Goals
  - Protect cryptographic material against software attacks, i.e., confidentiality, integrity and authenticity of critical information.
  - Provide high flexibility and low costs.

Implementations available by Freescale, NXP, Infineon etc.

Key Features

- Secure key storage
- Symmetric (AES) cryptographic services
  - authentication
  - encryption, decryption.
- Pseudo Random number generator
- AES 128 crypto acceleration
- Secure boot and authentication of flash contents at

SHE Simplified Logical Structure

- Building Blocks
  - Storage area
  - AES implementation
  - Control logic
- Implementation as an on-chip peripheral of the microcontroller, e.g., small dedicated CPU core.
- Manufacturer specific enhancements of the basic specification are labeled as SHE+.

No protection against physical attacks

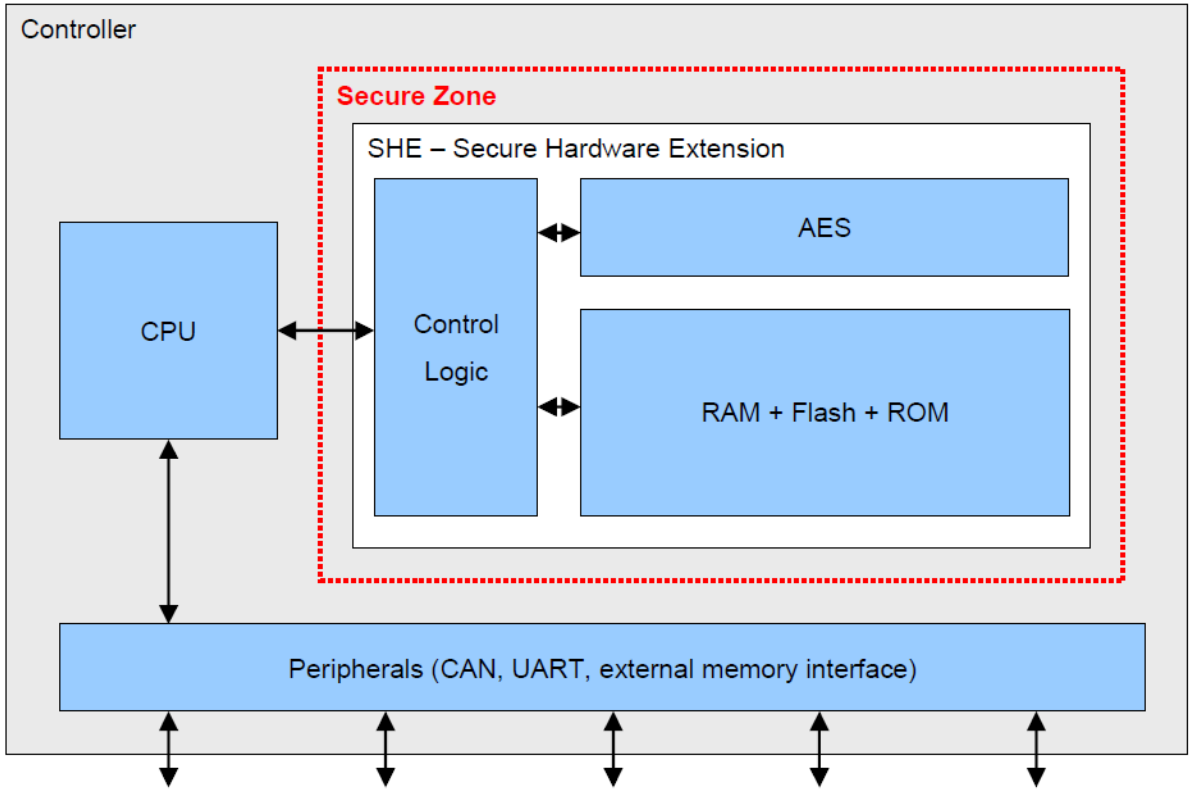

Source: Specification of Secure Hardware Extensions AUTOSAR FO R22-11

SHE Functionalities

- Cryptographic operations
  - AES-128 encryption / decryption in ECB and CBC mode (latency < $2\mu s$)
  - MAC generation / verification with CMAC using AES-128
  - Compression function using the Miyaguchi-Preneel construction
  - Key derivation using the Miyaguchi-Preneel compression algorithm
- Data storage in volatile and non-volatile memory for keys, MACs etc.
  - Accessible only by the SHE control logic (and not the CPU other peripheral)
- Pseudo random number generator (PRNG)
- Secure boot
  - Monitor the integrity of the software after every power cycle/reset
  - Calculating a MAC of the program flash and comparison with a reference value

SHE Detailed Logical Structure

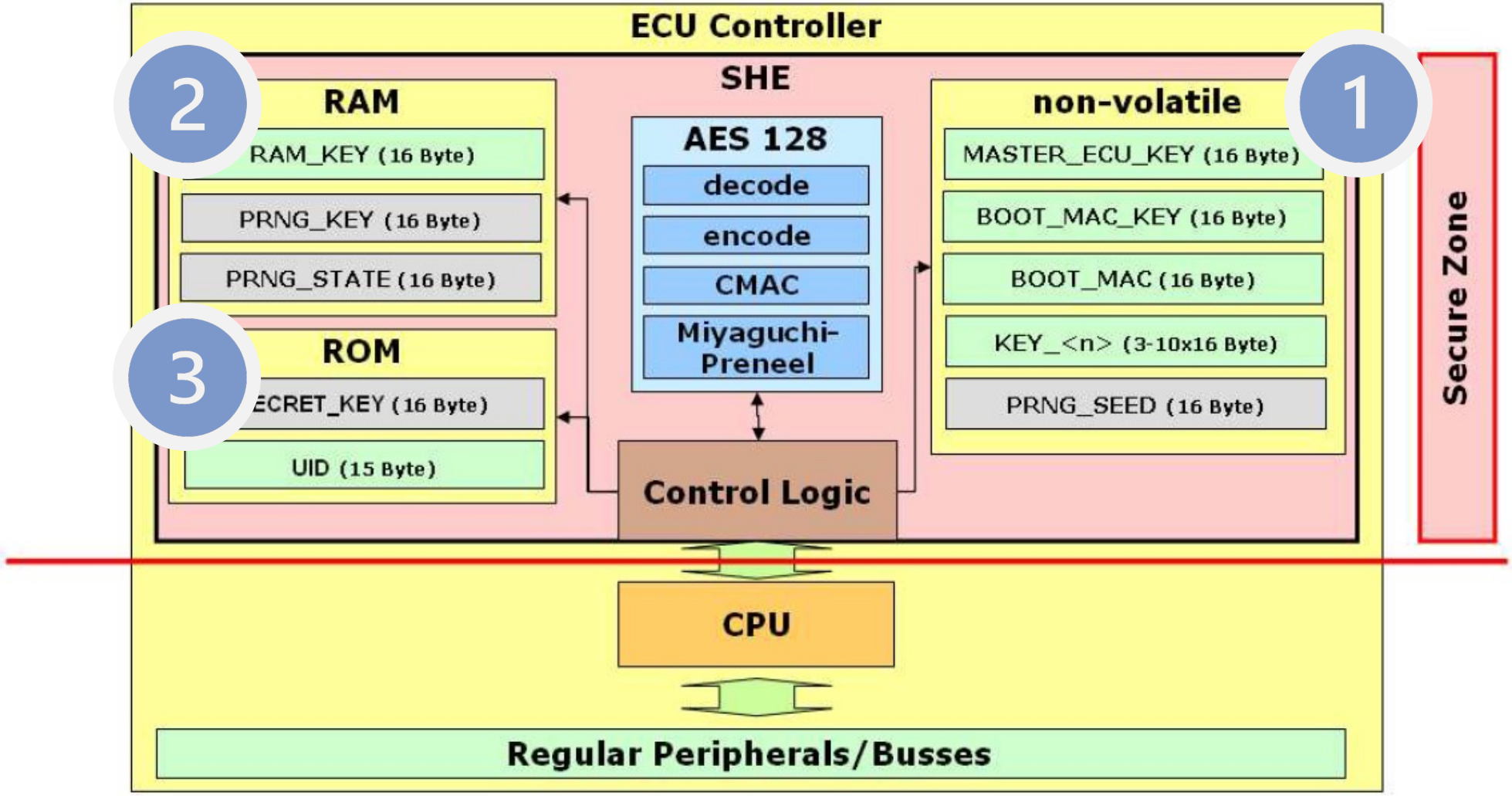

Source: Specification of Secure Hardware Extensions AUTOSAR FO R22-11

SAPAR

Thank You

Contact us for more details

Phone: +49 176 56720564

Email: Jetzabel.Serna@cs-sapar.com

Website: www.cs-sapar.com